5 Watt / 24Pins DIL / 500Vdc Isolation / 2:1 Input Range

FEATURES:

1. Low Cost, High Performance
2. Miniature DIL Package And 2:1 Input Range
3. 500Vdc Input/Output Isolation
4. No External Components Required
5. Low Profile and Compact Size

APPLICATIONS:

1. Telecommunications
2. Battery Powered Systems
3. Transportation Equipment
4. Portable Instruments
5. Distributed Power Systems

Specification At 25℃

Input Specifications:	General Specifications:
Input Voltage Range: See Table	Isolation Voltage:500Vdc
Input Filter: PI Type	Efficiency: See Table
Output Specifications:	Switching Frequency: 200KHz typical
Output Voltage & Current: See Table	Isolation Resistance: 1000M ohm
Voltage Accuracy: ±2% max	**Environmental Specifications:**
Output Voltage Balance(Dual Outputs): ±1%	Operating Temperature: -25 to +71℃
Line Regulation(at full load): ±1% max	Storage Temperature: -40 to +105℃
Load Regulation (at full load to 1/4 load):	Cooling: Free air convection
Single Output:±1% max ,Dual Output:±2.5% max	Humidity Non-Condensing: 20 to 95% RH
Temperature Coefficient: ± 0.05% / ℃ max	**Physical Specifications:**
Ripple & Noise(20MHz BW): 1% p-p max	Case Material:Nickel-Coated Copper With Non-Conductive Base
Short Circuit Protection: Power Fold Back	
Over Load Protection:Build-in	Weight: 15 Grams Typical

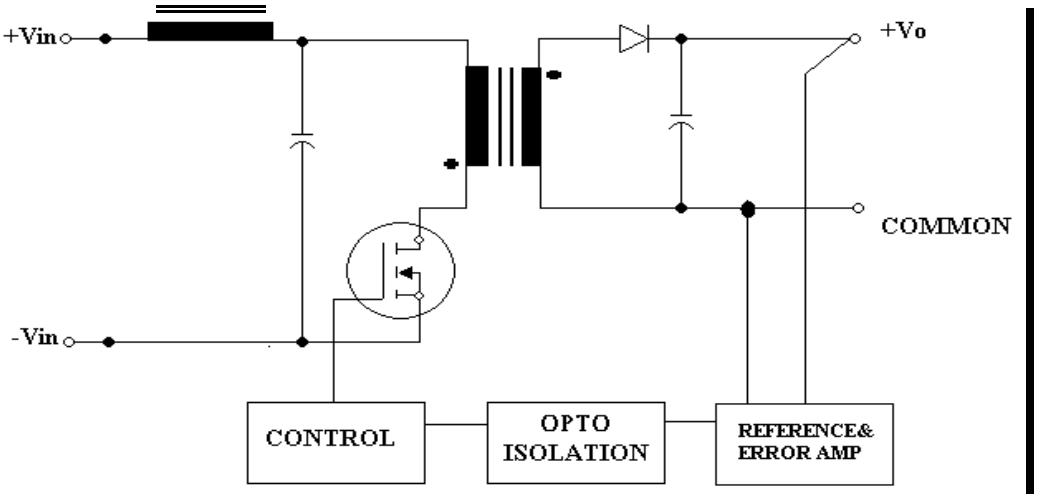

Simplified Schematic

Ordering Information:

T	05	B	D	050	—	05	S	05
Company	Isolation Voltage	Input Vol. Model	Package	Output Watt		Input Voltage	Output Model	Output Voltage
TAIMAG	05=500,10=1000	A=±5%~10%	S=Single	050=5Watt		05=5V±5%	S=Single	05=5V
	15=1500,20=2000	B=2:1,C=4:1	D=Dual,SM=SMD			Or 9-18V	D=Dual	

Electrical Specification:

Model	Input			Output		Efficiency Typical % (a)	Package External Fuse (b)
	Voltage (Vdc)	Current(mA) No-Load	Current(mA) Full-Load	Voltage (Vdc)	Current (mA)		
T05BD050-12S05	9-18	48	580	5	1000	71	H/I ,1.5
T05BD050-12S12	9-18	48	500	12	400	80	H/I ,1.5
T05BD050-12S15	9-18	48	510	15	330	80	H/I ,1.5
T05BD050-12D05	9-18	48	580	±5	±500	71	H/I ,1.5
T05BD050-12D12	9-18	48	526	±12	±200	76	H/I ,1.5
T05BD050-12D15	9-18	48	513	±15	±160	77	H/I ,1.5
T05BD050-24S05	18-36	42	282	5	1000	73	H/I ,1
T05BD050-24S12	18-36	42	250	12	400	80	H/I ,1
T05BD050-24S15	18-36	42	254	15	330	81	H/I ,1
T05BD050-24D05	18-36	42	290	±5	±500	71	H/I ,1
T05BD050-24D12	18-36	42	263	±12	±200	76	H/I ,1
T05BD050-24D15	18-36	42	250	±15	±160	80	H/I ,1
T05BD050-48S05	36-72	36	140	5	1000	74	H/I ,0.5
T05BD050-48S12	36-72	36	125	12	400	80	H/I ,0.5
T05BD050-48S15	36-72	36	127	15	330	81	H/I ,0.5
T05BD050-48D05	36-72	36	145	±5	±500	71	H/I ,0.5
T05BD050-48D12	36-72	36	131	±12	±200	76	H/I ,0.5
T05BD050-48D15	36-72	36	128	±15	±160	78	H/I ,0.5

(a) Efficiency is specified at nominal input voltage and full load.

(b) Certain applications may require the installation of external fuse in front of the input.

Dimensions: Unit=mm±0.25

Pin Connections		
Pin Number	Package H/I	
	Single	Dual
1&24	+Input	+Input
2&23	NC	-Output
3&22	NC	COM
10&15	-Output	COM
11&14	+Output	+Output
12&13	-Input	-Input

Package H:Nickel-Coated Copper Base

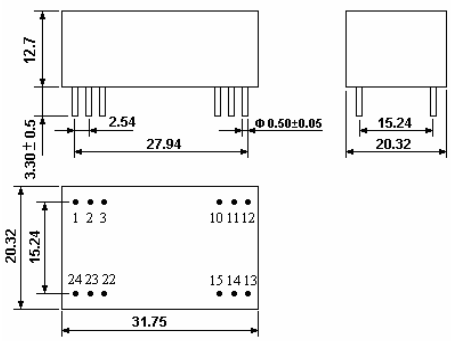

Package I:Non-Conductive Plastic Case